TOOLHOLDER MAINTENANCE

ANATOMY OF A TOOLHOLDER

Toolholders are the **MOST IMPORTANT CONNECTION** between the machine and cutting tool. High-quality toolholders can extend tool life and save you money on perishable tooling.

A machine is only as good as its weakest link. With proper toolholder maintenance, along with timely collet and pull stud replacement, you can ensure low T.I.R. and extend tool life.

The chart below shows the relative impact runout has on tool life. The TIR% (Total Indicated Runout) is a % of the recommended chip load per tooth.

As runout increases, tool life is decreased.

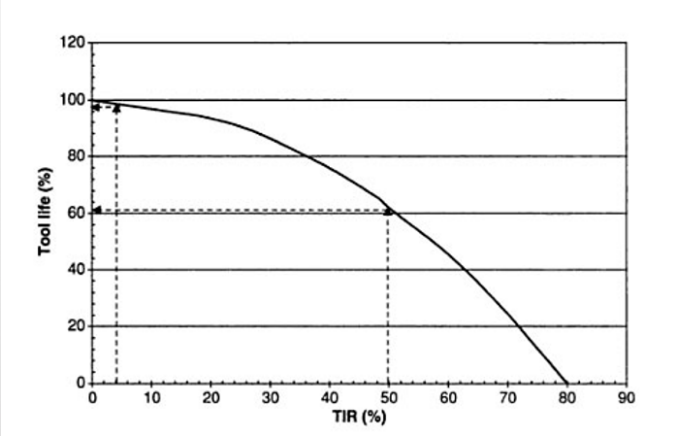

PREVENTIVE MAINTENANCE

Overall cleanliness of your toolholder, collet pocket, collet, and nut must be maintained. All of these components are manufactured to perform within tolerances of ten-thousandths of an inch (.0001"). Any dirt, dust, oil, chips, or other contaminant left on the spindle, taper, flange, collet, collet pocket, or nut can cause poor T.I.R. leading to premature wear.

We recommend regular preventative maintenance be implemented to protect your tooling and prevent scraps.

Remove toolholder from spindle when not in use.

Use air to remove metal chips and dirt from the toolholder.

Wipe the toolholder with a clean rag.

Spray the toolholder with anti-rust spray to prevent rusting

Put the toolholder in an anti-rust bag.

Store the toolholder on the correctly tapered rack.

SETUP

The best defense against unwanted wear is to properly set up your toolholder.

- Make sure to use the proper pull stud (retention knob) and tighten with a torque wrench to prevent overtightening, which causes swelling of the pull stud and bulging of the toolholder.
- Place the collet in the nut prior to threading the nut onto the toolholder. DO NOT place the collet directly in the pocket.
- Make sure the shank of the cutting tool extends to the bottom of the collet.
- Use a torque wrench and tightening stand to ensure the nut is tightened to the proper specification following the torque chart *(page 5)*.
- Use indicator arm to check toolholder concentricity.

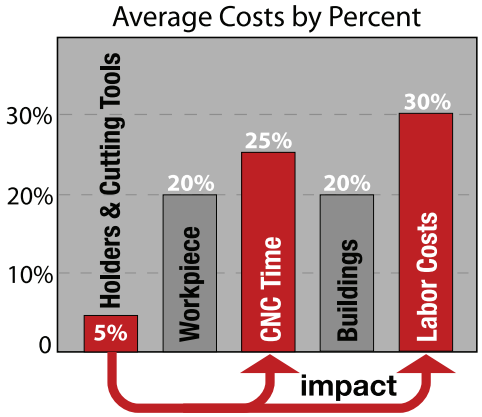

Proper care and use of your toolholders is the most cost-effective way to increase your machine productivity while reducing downtime and scrap.

WEAR OF COLLETS

HOW DO I KNOW WHEN TO REPLACE COLLETS?

Collets are designed to wear out as they lose accuracy and rigidity with use. High side-load forces during milling operations cause cutting tool deflection as illustrated below.

Over time, these side-load forces will bell-mouth the collet at its face.

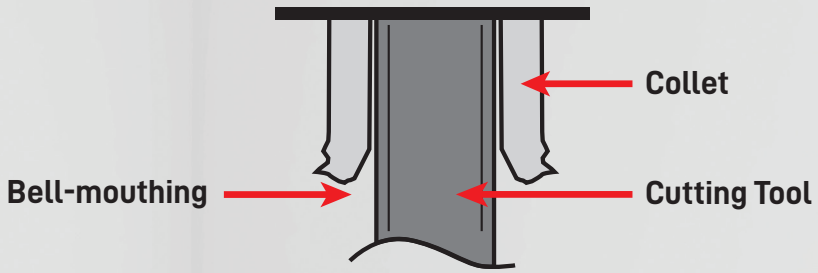

Fretting (wear marks) on the taper indicates the collet has vibrated in the holder.

Galling on the 30° face.

An actual collet collected from a customer. The amount of rust makes any degree of accuracy impossible to achieve.

HOW TO CARE FOR AND MAINTAIN COLLETS?

Collets are tools that are subject to wear, corrosion, and abrasion over a period of time. Gradual damage and wear can lead to loss of accuracy and functioning and may result in poor quality or interruption in your CNC machining operations. Therefore, it's critical to maintain and take proper care of collets to ensure their longevity and optimum performance. Here are some pointers on caring for collets:

- **Perform regular cleanings**
- **Keep collets free from any debris or obstructions**
- **Inspect collets from wear and tear**

WHEN TO REPLACE?

It is recommended to change collets out every 4-6 months, depending on usage, to ensure the most rigid and accurate collet chuck assembly

WEAR OF TOOL HOLDERS

EVALUATING TOOLHOLDERS FOR WEAR

A worn out holder will not provide good accuracy and will quickly wear out your cutting tools. Worn tooling causes poor surface finish, and may damage your spindle.

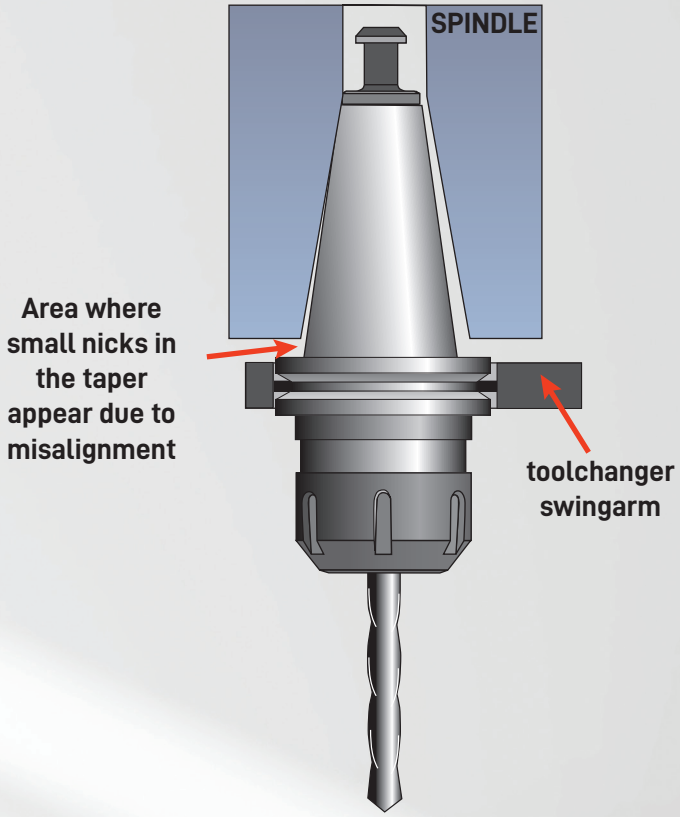

TAPER WEAR / FRETTING

Check the taper for signs of wear or damage where it contacts the spindle mouth. Any problems with the taper will have a direct effect on machining accuracy. If there are any imperfections on the taper, the toolholder should not be used.

Fretting (wear marks) on a toolholder taper.

PULL STUD REPLACEMENT

The pull stud is a critical safety component because it maintains the connection between the spindle and the toolholder. If that connection fails, the holder will dangerously fly out of the spindle.

Check the pull studs periodically for signs of wear, cracks, or other damage, and replace any that are not perfect or a dangerous situation may result.

Marks on the end of a pull stud that is either not correct for the machine spindle gripper, or the gripper is damaged.

SETUP EQUIPMENT AND ACCESSORIES

The proper setup equipment from Techniks will ensure your tooling performs to its full potential

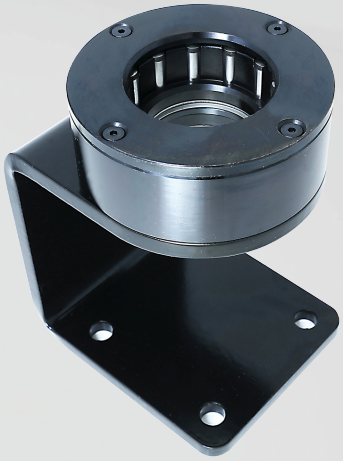

TIGHTENING FIXTURES

- For CAT, BT, HSK, ISO & PSC tapers
- Change retention knobs from below

ECE INDICATOR ARMS

- "One Twist" 360° adjustable joints
- Hydraulic mechanism provides rigid set-up.
- Powerful magnetic base

SPINDLE WIPERS

- For CAT, BT, ISO, HSK spindles
- Keep spindle and tapers clean

ADJUSTABLE TORQUE WRENCHES AND ADAPTERS

- "Pull-release" locking system makes locking wrench at correct torque more secure.

Collet and Nut Torque Chart

Collet	Nut	Collet I.D. over 1/16" (2MM)	Collet I.D. under 1/16" (2MM)
ER 16	slotted	42 ft/lbs	30 ft/lbs
ER 16	hex	42 ft/lbs	30 ft/lbs
ER 20	slotted	59 ft/lbs	24 ft/lbs
ER 20	hex	59 ft/lbs	24 ft/lbs
ER 25	slotted	77 ft/lbs	77 ft/lbs
ER 25	mini nut	25 ft/lbs	25 ft/lbs
ER 32	slotted	100 ft/lbs	100 ft/lbs
ER 40	slotted	130 ft/lbs	130 ft/lbs
SYOZ 25	hook	90 ft/lbs	90 ft/lbs
TG 75	hook	90 ft/lbs	90 ft/lbs
TG 100	hook	90 ft/lbs	90 ft/lbs

Pull Stud (Retention Knob) Torque Chart

Pull Stud	Wrench Flats	Drive	Torque
BT 30 Taper	0.535"	1/4"	36 ft/lbs
ISO 30 Taper	0.535"	3/8"	36 ft/lbs
Any 40 Taper	0.750"	3/8"	76 ft/lbs
BT 50/CAT 50 Taper	1.187"	1/2"	100 ft/lbs

THE TECHNIKS BUILT FOR SPEED ADVANTAGE

HOLDING POWER TESTING – FT/LBS

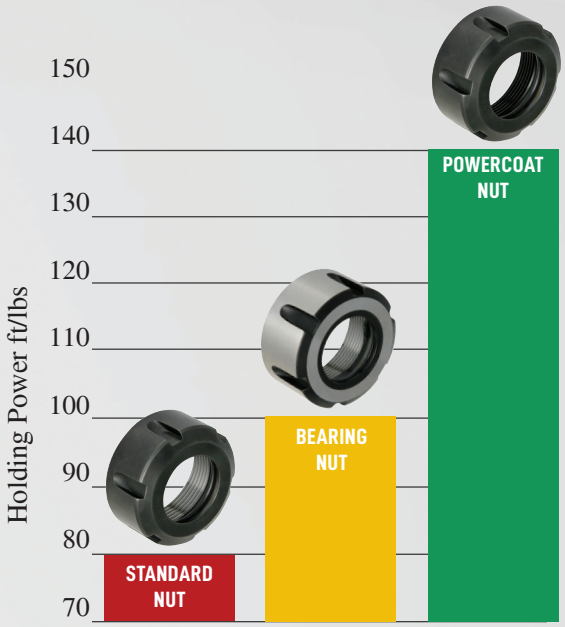

PowerCOAT nut extends tool life by reducing friction so it can increase holding power by 75% compared to standard nuts.

BALANCE INSPECTION WITH EVERY HOLDER

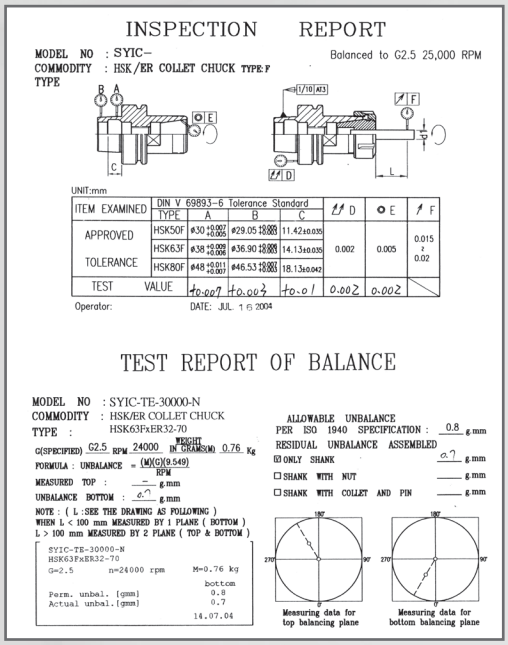

INSPECTION REPORT

MODEL NO : SYIC–
COMMODITY : HSK/ER COLLET CHUCK TYPE: F
TYPE

Balanced to G2.5 25,000 RPM

UNIT:mm

ITEM EXAMINED	DIN V 6989.3–6 Tolerance Standard TYPE	A	B	C	D	E	F
APPROVED TOLERANCE	HSK50F	ø30 +0.007 +0.005	ø29.05 +0.005 +0.003	11.42±0.035	0.002	0.005	0.015 ± 0.02
	HSK63F	ø38 +0.009 +0.006	ø36.90 +0.006 +0.003	14.13±0.035			
	HSK80F	ø48 +0.011 +0.007	ø46.53 +0.007 +0.003	18.13±0.042			
TEST VALUE		+0.007	+0.003	+0.01	0.002	0.002	

Operator: DATE: JUL. 16 2004

TEST REPORT OF BALANCE

MODEL NO : SYIC-TE-30000-N
COMMODITY : HSK/ER COLLET CHUCK
TYPE : HSK63FxER32-70

G(SPECIFIED) G2.5 RPM 24000 WEIGHT IN GRAMS(M) 0.76 Kg
FORMULA : UNBALANCE = (M)(G)(9.549) / RPM
MEASURED TOP : – g.mm
UNBALANCE BOTTOM : 0.7 g.mm

NOTE : (L : SEE THE DRAWING AS FOLLOWING)
WHEN L < 100 mm MEASURED BY 1 PLANE (BOTTOM)
L > 100 mm MEASURED BY 2 PLANE (TOP & BOTTOM)

SYIC-TE-30000-N
HSK63FxER32-70
G=2.5 n=24000 rpm M=0.76 kg

	bottom
Perm. unbal. [gmm]	0.8
Actual unbal.[gmm]	0.7

14.07.04

ALLOWABLE UNBALANCE
PER ISO 1940 SPECIFICATION : 0.8 g.mm
RESIDUAL UNBALANCE ASSEMBLED
☒ ONLY SHANK 0.7 g.mm
☐ SHANK WITH NUT ___ g.mm
☐ SHANK WITH COLLET AND PIN ___ g.mm

Measuring data for top balancing plane
Measuring data for bottom balancing plane

TECHNIKS CERTIFIED ACCURACY BALANCE

TECHNIKS TOOL HOLDER SURVEY

- Techniks offers FREE training on tool holder best practices and setup
- Ensure the correct tool holders are used for your application
- Evaluation of tool holder and collet inventory to maximize tool life and machining performance

DELIVERING LIVE ON-SITE TOOL DEMOS & TRAINING

SCHEDULE A VISIT NOW!

CALL: 800-597-3921

Contact **Techniks** today!
800-597-3921 • info@techniksusa.com